RedMere
Smart. Active. Connected.

10.2Gbps HDMI Cable Mini Booster Module Family

Features

- Contains RM1695 for HDMI active cable equalization
- ATC compliant High Speed HDMI Cable® solution
- Separate data equalization performed for each channel for up to 3.4Gbps
- Cable assembly production test support
- No external power required
- Module PCB size 10mm x 10.5mm
- Supports standard A-type connector

Applications

- High speed connectivity for ultra-portable and power conscious sources such as smartphones, cameras, camcorders and webtablets.
- HDMI cable assemblies that utilise standard 19 wire bulk cable and reduced wire count bulk cable

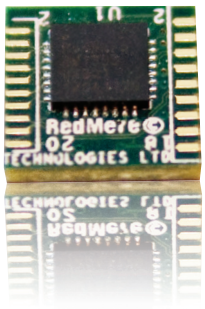

Product Overview

The mini module is a 'smart' cable booster for ultra high speed HDMI cable applications. It utilizes RedMere's unique semiconductor technology to enable 10.2Gbps HDMI cables. Data rates up to 3.4Gbps are supported per channel. On-board active equalization individually compensates for signal attenuation on each of the differential inputs up to 3.4Gbps. This is achieved without requiring an external power source. As well as allowing highly attenuated cables to pass future HDMI® ATC eye diagram tests (5-3), the mini booster module also ensures active cables will comply with the +5V 5mA (5-11) compliance test.

Fig I. - Functional Block Diagram

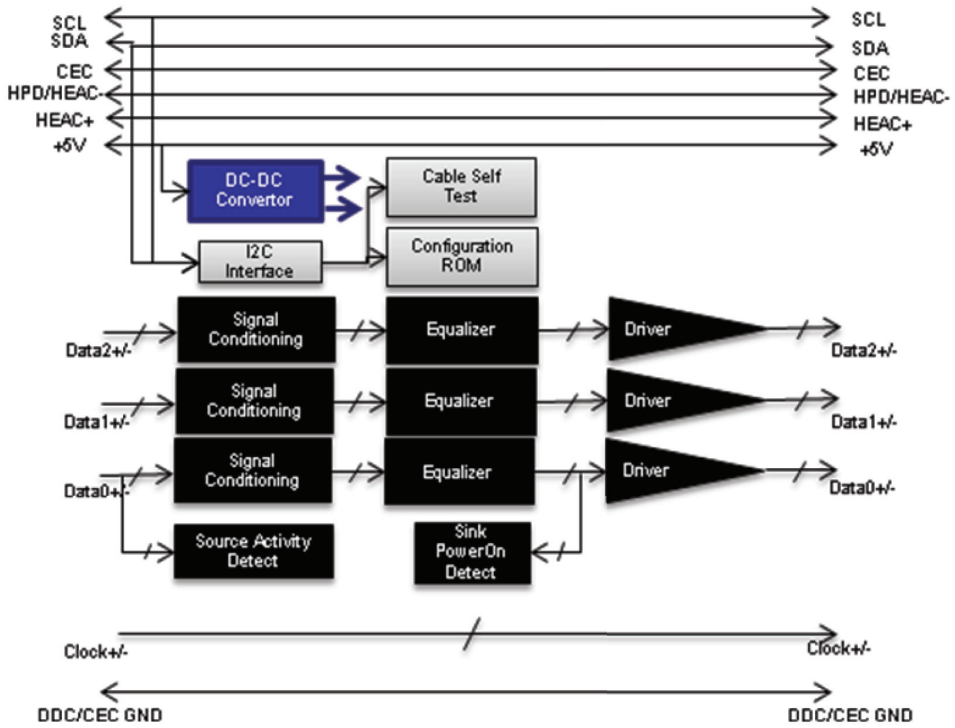

This enables the implementation of an extremely robust design which will pass related HDMI ATC compliance tests using standard or reduced wire-count HDMI bulk-cable architectures.

The 'smarts' embedded in the mini module also facilitates a simple and effective production test of each cable on the production line without requiring expensive ATC equivalent equipment, enabled by RedMere's VerifEye™.

Ordering Information:

Description: 10.2 Gbps embedded HDMI 1.4 Cable Mini Booster Module

RedMere
Building 6500, Avenue 6000
Cork Airport Business Park
Co Cork, Ireland
Tel +353 21 483 8050
info@redmere.com

www.redmere.com

RedMere ECO FRIENDLY